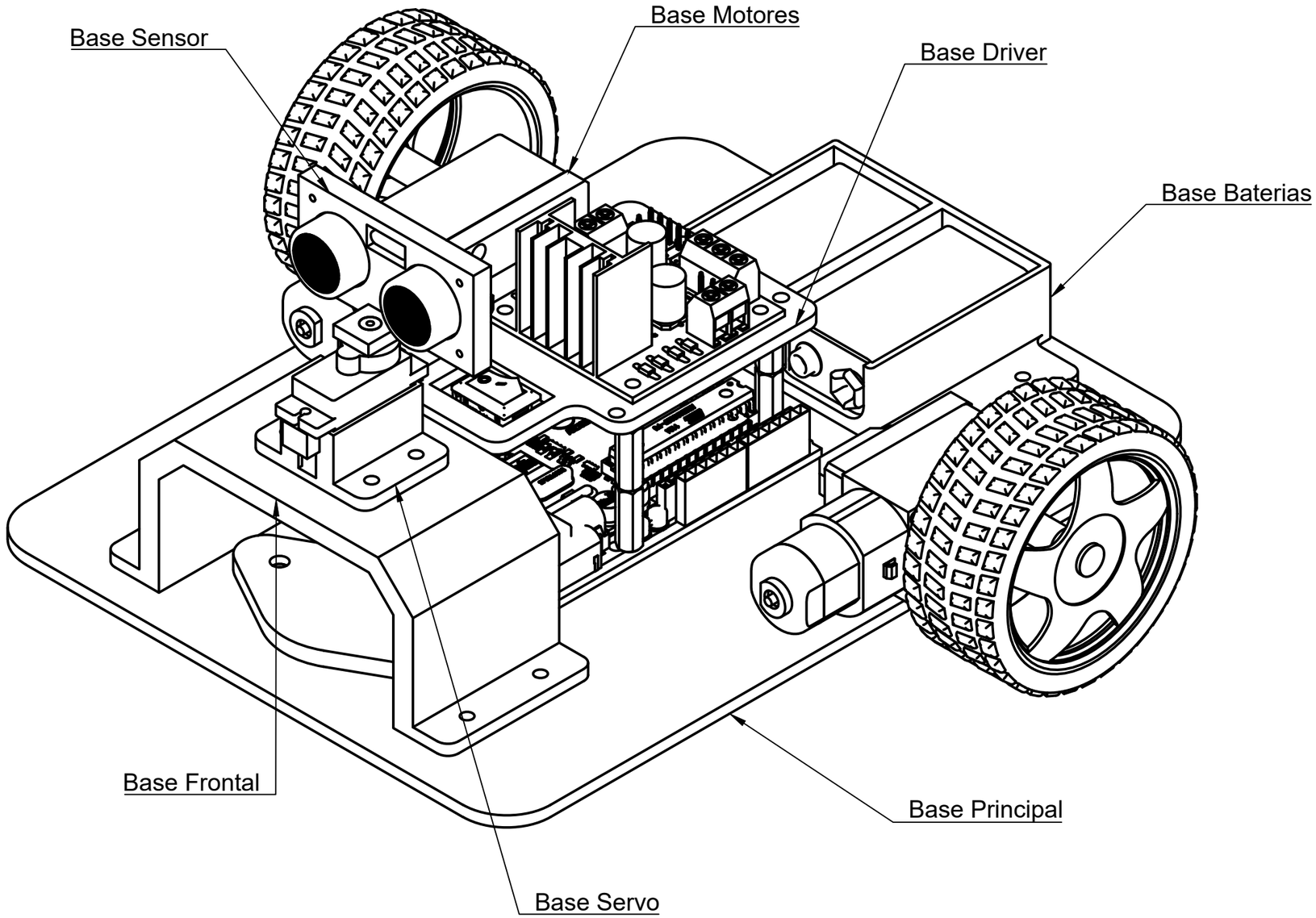

Dept.	Technical reference	Created by	Approved by
	POWERPUFF	KIMBERLEY MORALES ALVARADO 21/11/25	
		Document type	Document status
		Title Ensamblaje	DWG No.
			Rev. / Date of issue / Sheet 1/1